This drawing is the property of Shanghai Shaoyaowu Valve Co.,Ltd.
It is protected by copyright and unfair competition law.Reprint or reproduction, passing on to third parties and public-cation of this drawing are subject to written permission of Shanghai Shaoyaowu Valve Co.,Ltd.

本图为上海邵姚武阀门有限公司的所有权。受知识产权和反不正当竞争法律的保护。对本图案的复制、生产、提供给第三方、印刷都必须得到上海邵姚武阀门有限公司的书面许可。

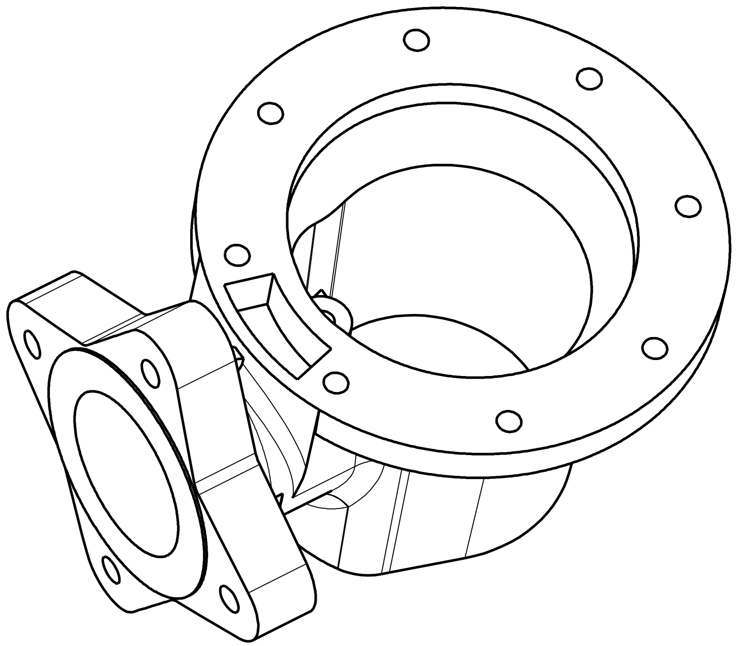

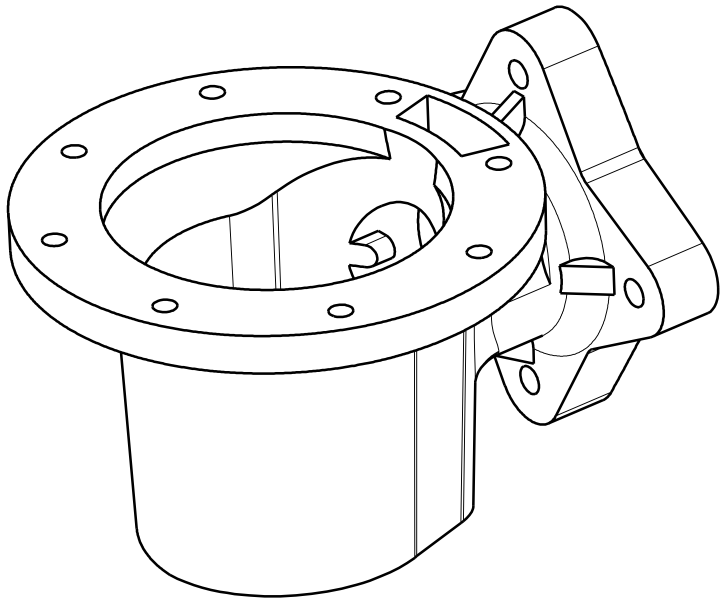

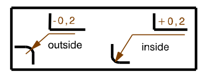

Fit	Tol.	Fit	Tol.	General tol. ISO 2768-m Surface ISO 1302 Connectricity ◎ Ø0.15 All dimensions in mm	Material: ADC-12(530)
				Drawn / Check (Date, Name)	Diaphgram case
Ind.	Index-No.	Date	Name	上海邵姚武阀门有限公司 Shanghai Shaoyaowu Valve Co.,Ltd	Scale: 2:1 — Code-No.: drawing code — Page
					Repl.by — Repl.for

PDF 檔案使用 "pdfFactory Pro" 試用版本建立 www.pdffactory.com